REVISIONS				
ZONE	REV.	DESCRIPTION	DATE	APPROVED
	01	INITIAL RELEASE		

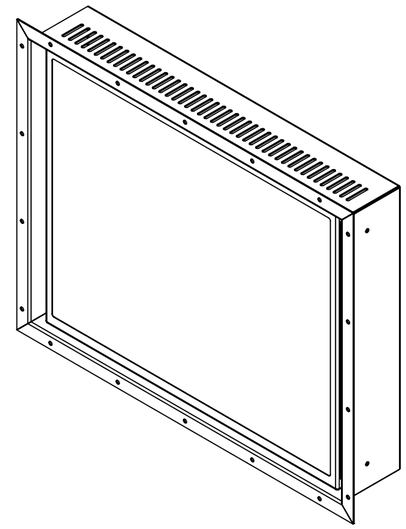

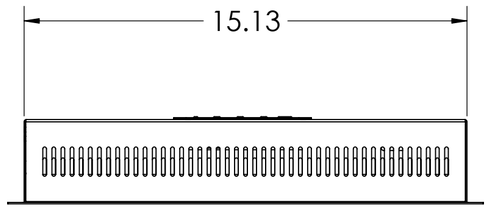

TOP VIEW

LEFT SIDE VIEW

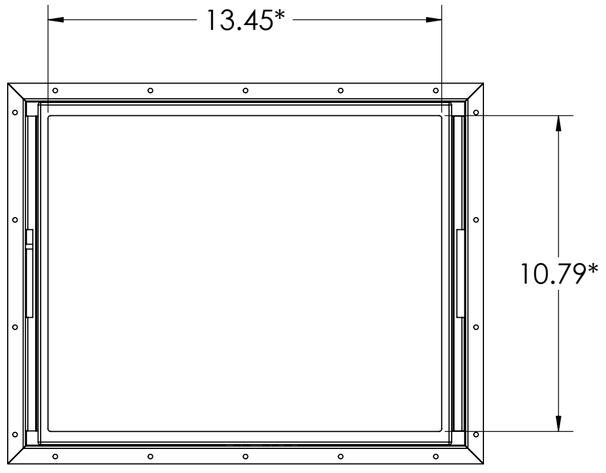

FRONT VIEW

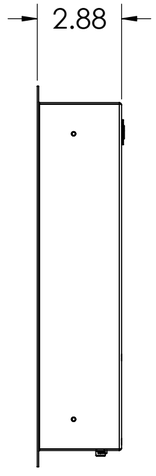

RIGHT SIDE VIEW

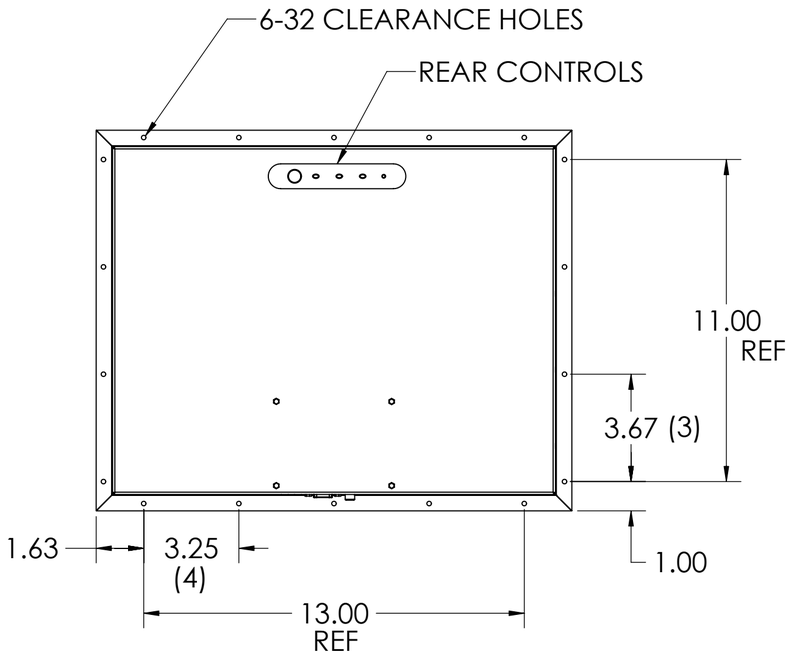

REAR VIEW

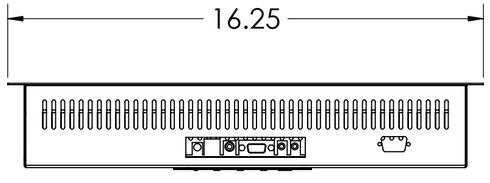

BOTTOM VIEW

* VIEWING AREA

PROPRIETARY AND CONFIDENTIAL
THE INFORMA TION CONTAINED IN THIS DRAWING IS THE SOLE PROPERTY OF ABRAXSYS CORPORSTION ANY REPRODUCTION IN PART OR AS A WHOLE WITHOUT THE WRITTEN PERMISSION OF ABRAXSYS CORPORATION IS PROHIBITED.

		UNLESS OTHERWISE SPECIFIED:		NAME	DATE
		DIMENSIONS ARE IN INCHES TOLERANCES: FRACTIONAL ± ANGULAR: MACH ± BEND ± .5° TWO PLACE DECIMAL ± .020 THREE PLACE DECIMAL ± .010	DRAWN	ARJ	10/29/06
			CHECKED		
			ENG APPR.		
			MFG APPR.		
		INTERPRET GEOMETRIC TOLERANCING PER:	Q.A.		
		MATERIAL	COMMENTS:		
NEXT ASSY	USED ON	FINISH			
APPLICATION		DO NOT SCALE DRAWING			

AbraxSys Corporation

TITLE:

OUTLINE DRAWING, 17"

SIZE	DWG. NO.	REV
C		01
SCALE: 1:4		SHEET 1 OF 1